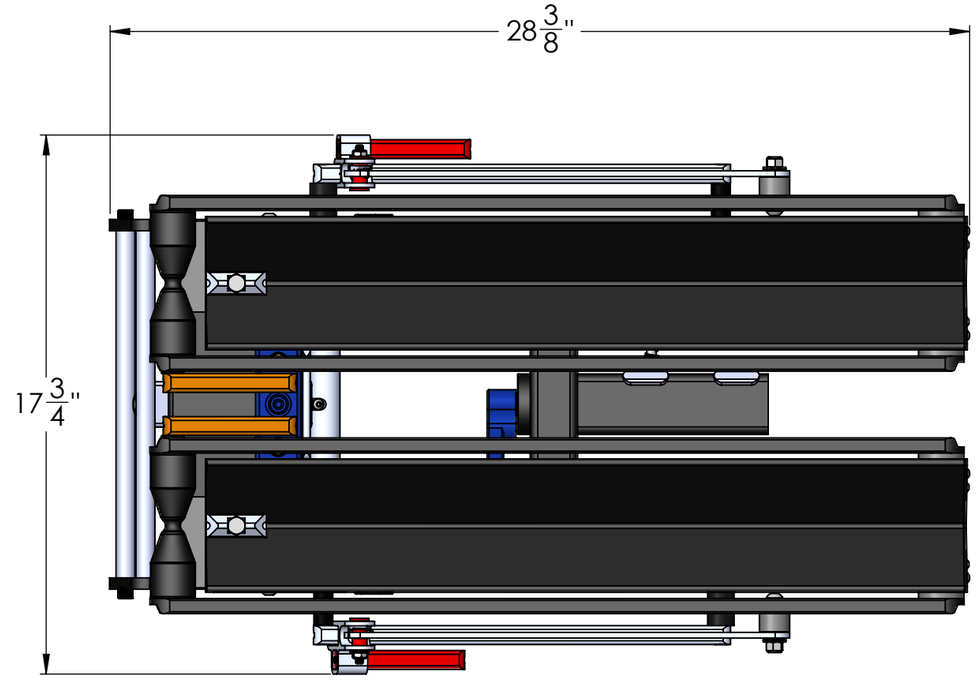
28 3/8"
17 3/4"

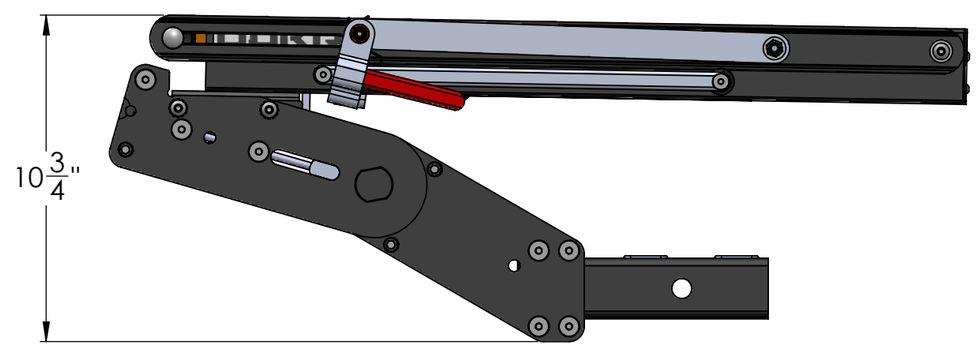
10 3/4"