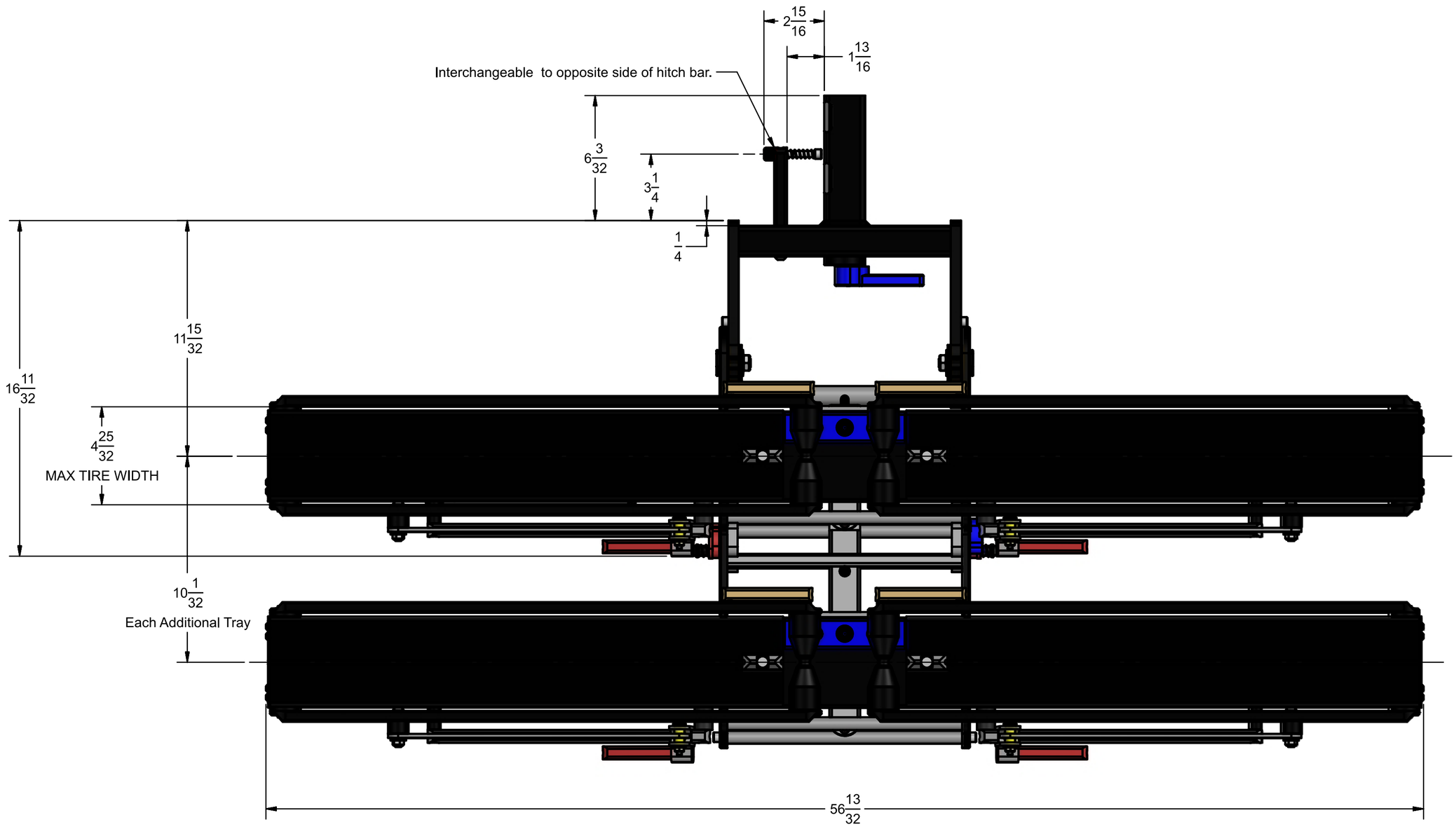
2 15/16
1 13/16
Interchangeable to opposite side of hitch bar.
6 3/32
3 1/4
1/4
11 15/32
16 11/32
4 25/32
MAX TIRE WIDTH
10 1/32
Each Additional Tray
56 13/32

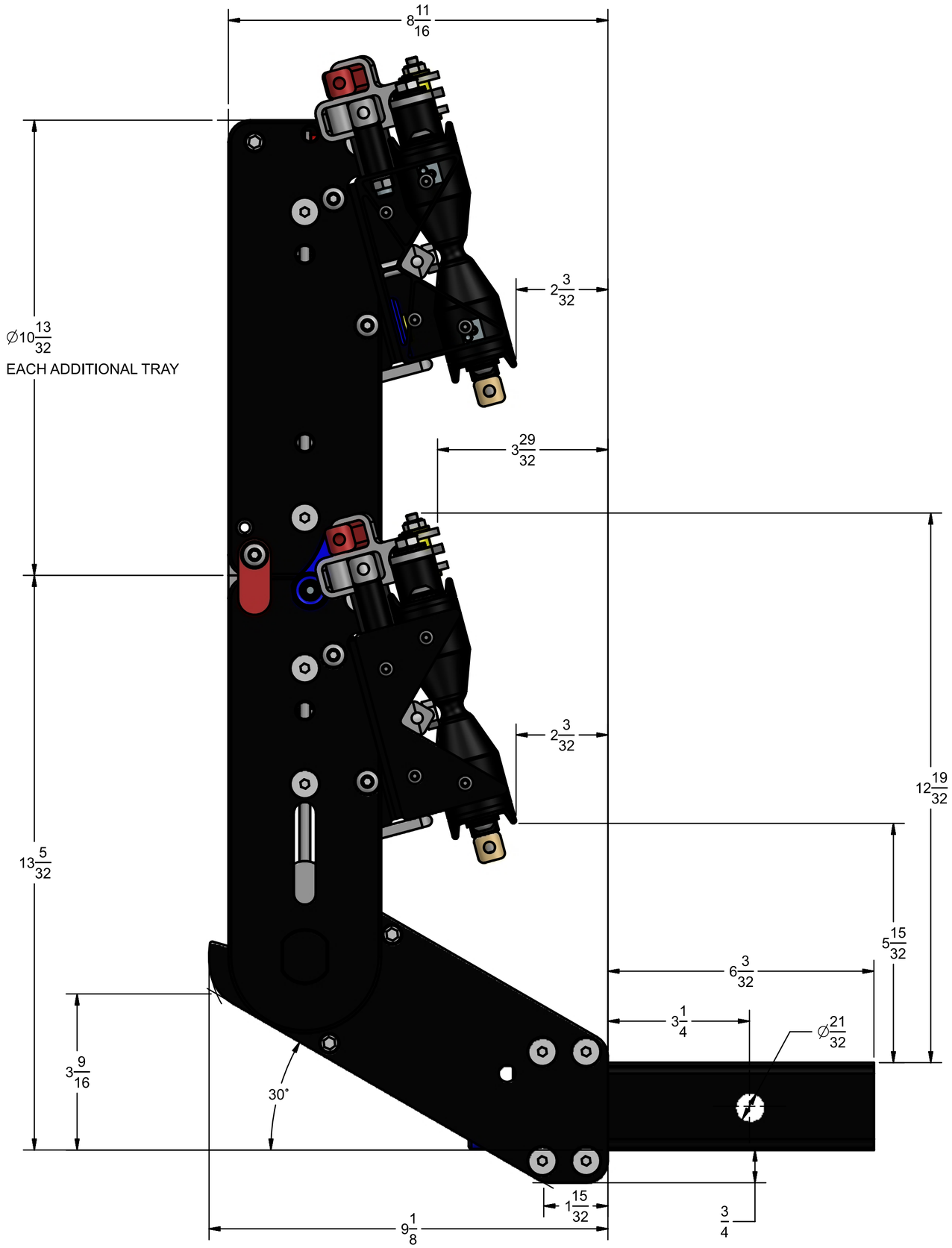
8 11/16
2 3/32
Ø10 13/32
EACH ADDITIONAL TRAY
3 29/32
2 3/32
12 19/32
13 5/32
5 15/32
6 3/32
3 1/4
Ø21/32
3 9/16
30°
1 15/32
3/4
9 1/8

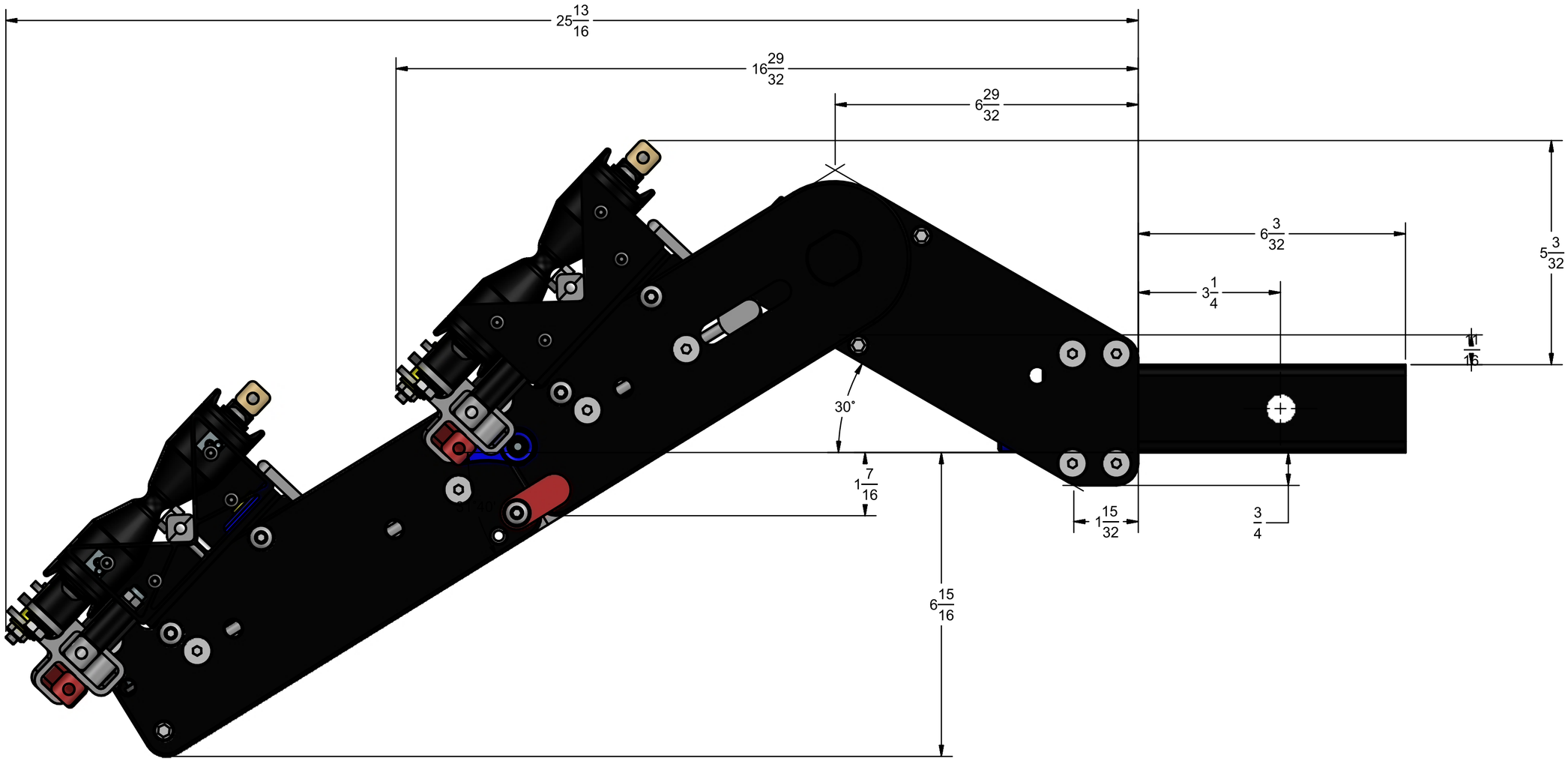
25 13/16
16 29/32
6 29/32
6 3/32
5 3/32
3 1/4
11/16
30°
1 7/16
1 15/32
3/4
6 15/16

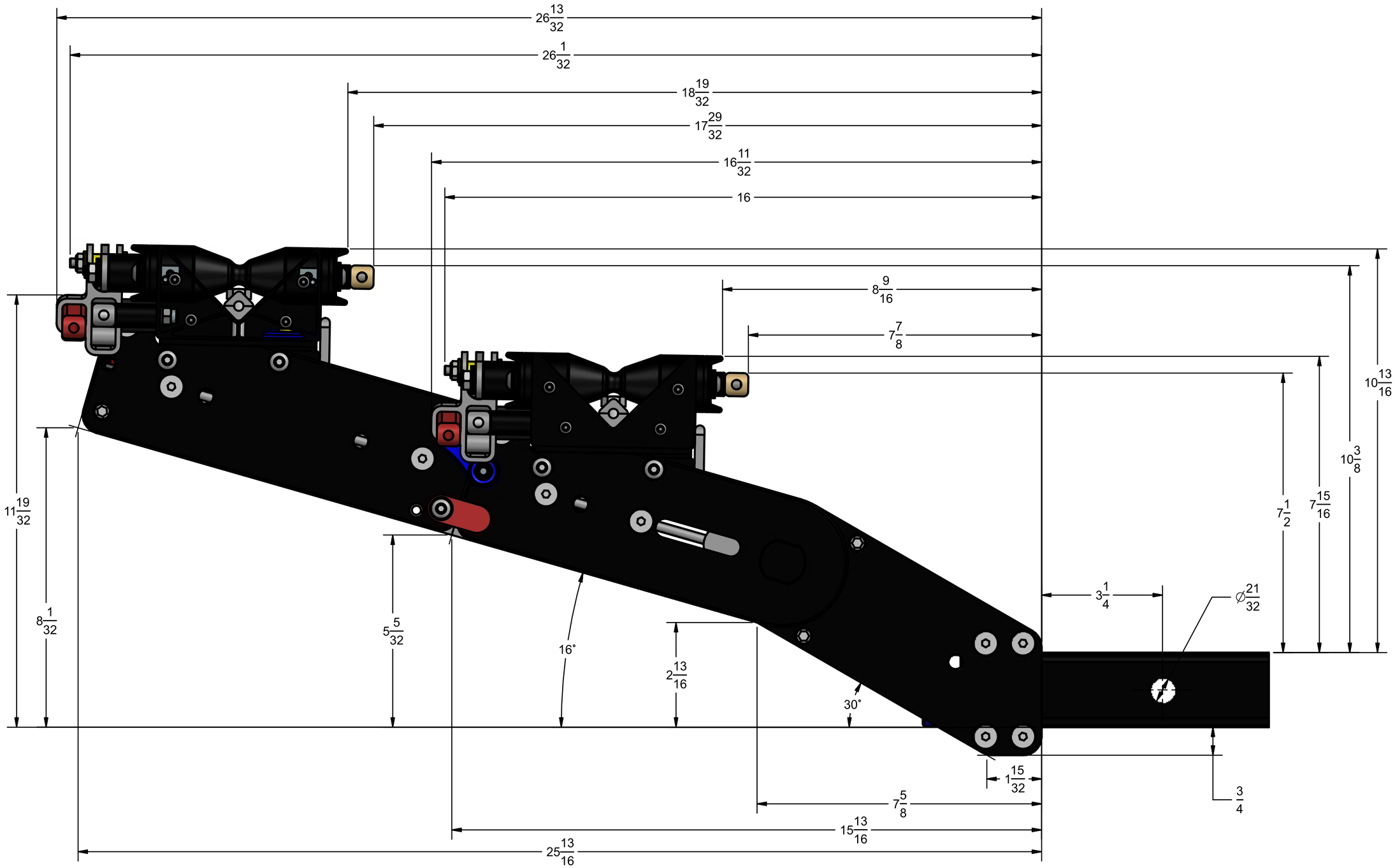
26 13/32
26 1/32
18 19/32
17 29/32
16 11/32
16
8 9/16
7 7/8
10 13/16
10 3/8
7 15/16
7 1/2
11 19/32
8 1/32
5 5/32
16°
2 13/16
30°
3 1/4
∅21/32
1 15/32
7 5/8
15 13/16
25 13/16
3/4

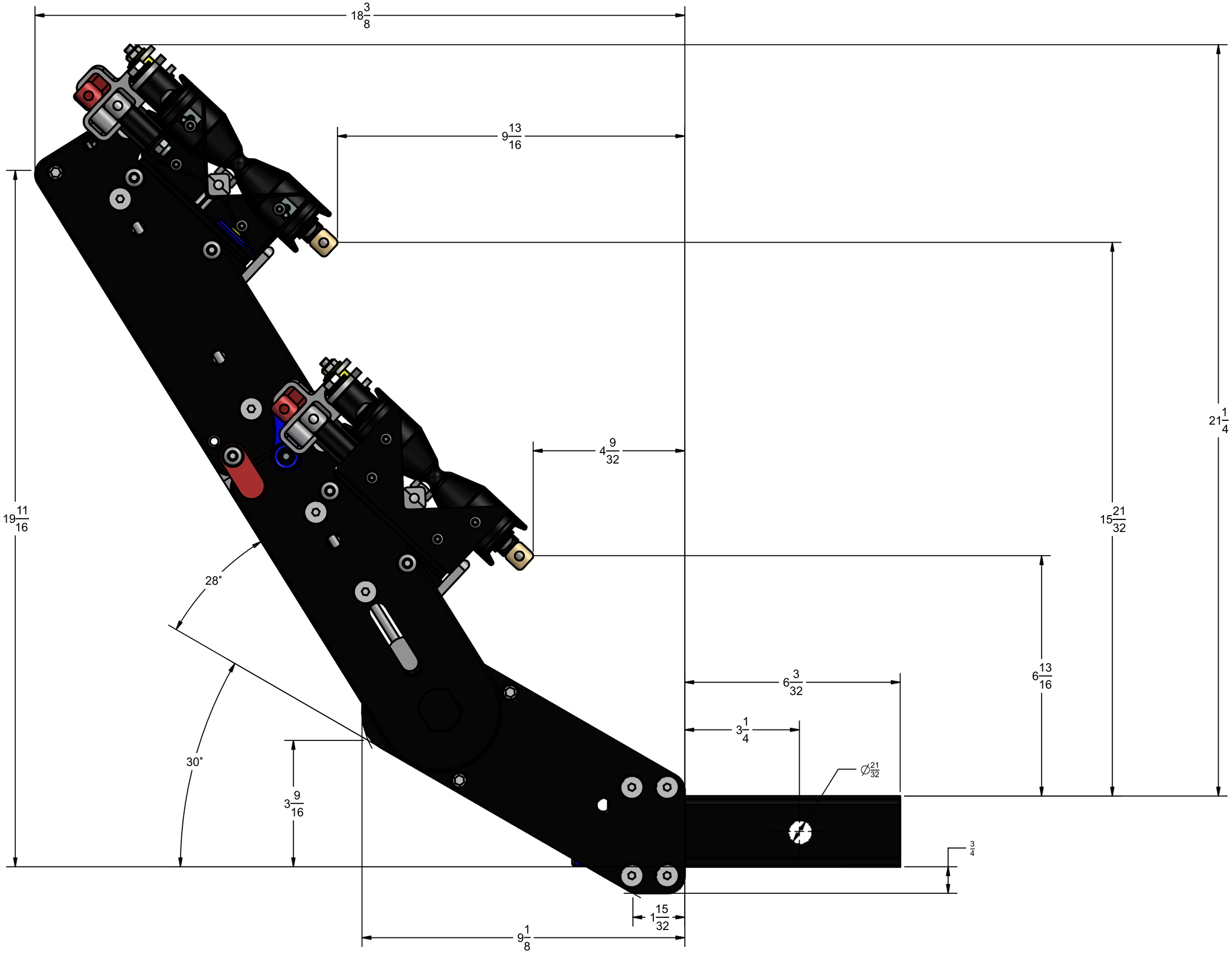
18 3/8
9 13/16
21 1/4
19 11/16
4 9/32
15 21/32
28°
6 13/16
6 3/32
3 1/4
30°
Ø 21/32
3 9/16
3/4
1 15/32
9 1/8